REVISIONS			
REV.	DESCRIPTION	DATE	BY

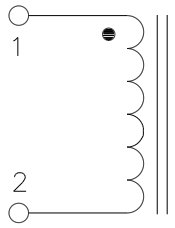

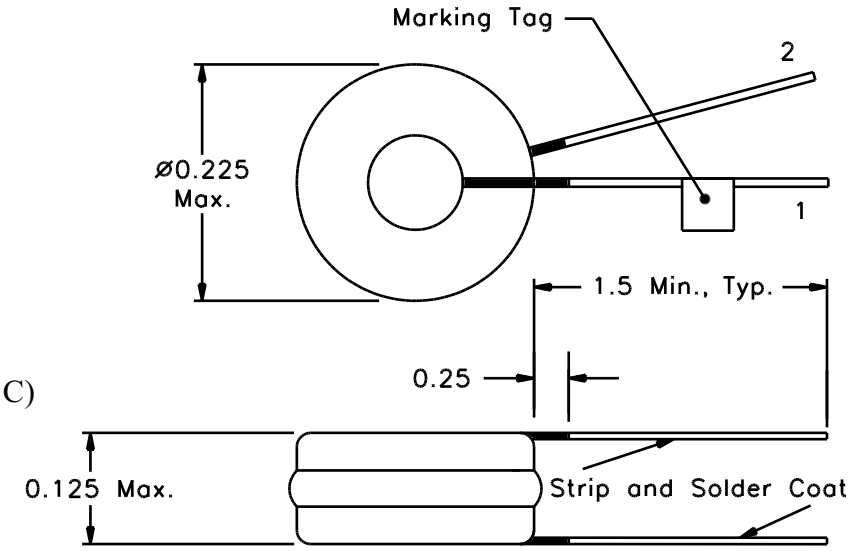

Classification

MIL-PRF-27 Grade:	6
MIL-PRF-27 Class:	S (130° C)
Maximum Ambient Temperature:	105° C

MIL-STD-981 Quality Assurance Provisions

Class	Description	Drawing Number[1]
C	Commercial Parts	33010-30
B	Group A Inspection	33010-31B
E	Group A Inspection	33010-31S
S	Group A Inspection	33010-31S and
	Group B Inspection	33010-85

[1] The germane data will ship with the hardware.

LOAD CONDITIONS

I_{DC} (1 - 2) = 0.11 A P_{TOTAL} < 0.2 W

Electrical Characteristics

DC Resistance: (1 - 2) = 390 mΩ Maximum

Inductance (measured at 0.1 V, 10 KHz):

(1 - 2) = 40.4 µH -10%, +53%, IDC = 0A

(1 - 2) = 36 µH Min., IDC = 0.10A

These Parts Are Manufactured in Strict Compliance to MIL-STD-981.

The "X" in the part number refers to the Quality Level (C, B, E, or S), see Quality Assurance Provisions above.	UNLESS OTHERWISE SPECIFIED: Dimensions are in inches, and tolerances are: Fractions ±1/64; Decimals .X = ±0.1, .XX = ±0.03, .XXX=±0.010; Angles ±10°		COAST/ACM		
			TITLE Inductor		
			FSCM 22558	DWG. NO 33010X	REV.
	DRAWN BY	DATE			
DO NOT SCALE DRAWING	Jim Allen	07/30/03	SCALE: none	MAX. WT.: 1.0 grams	SHEET 1 OF 1